City of Belle Plaine
218 N. Meridian Street
P.O. Box 129
Belle Plaine, MN 56011

Inspection Department
Building Official, Jim Tiegs
Phone: 952-873-5655
Fax: 952-873-5509

DECK PERMIT APPLICATION (Residential)

PERMIT:

WORK CLASS:	□ New	□ Addition	□ Remodel	□ Replacement

SITE	Address:	**Belle Plaine, MN**	P.I.N:
Lot Number:	Block Number:	Subdivision:	
OWNER	Name:	Phone:	
Address:		E-Mail:	
CONTRACTOR	□ **Homeowner**	Name or Company:	
Phone:	Contractor's License:	E-Mail:	
Address:			

WORK DESCRIPTION (Dimensions, Materials):

VALUATION *(Labor & Materials)* : **$**

Signature of this application by the legal property owner or a licensed contractor, as the owner's representative is required and authorizes the City of Belle Plaine Zoning Administrator or designee and the City of Belle Plaine Building Official or designee to enter upon the property to perform needed inspections. Entry may be without prior notice. Permit expires when building and work is not commenced within **180 days** from the date of Permit issued, or if building and work suspended, abandoned or not inspected for 180 days.
I hereby acknowledge that I have read this application and state that all information is true and correct to the best of my knowledge. I further agree that all work performed will be in accordance with approved plans, specifications and conditions, and to abide by all of the ordinances of the City and the Laws of the State of Minnesota regarding actions taken pursuant to this permit. I agree to pay all plan review fees even if I choose not to proceed with the work.

SIGNATURE OF APPLICANT: **DATE:**

OFFICE USE ONLY

Date Received:		**Permit Valuation:**	
Zoning Class:		**Type of Const:**	□ VB □ Other_____
Structure Height:		**Occupancy Type:**	
Code Used:	□ IRC □ IBC □ Other_____	**Sprinkled Bldg:**	□ Yes □ No

Setback Information:	**Actual:**	Front:_____	Rear:_____	Side:_____	Side:_____
	Required:	Front: *30'*	Rear: *5' or 30'*	Side: *0', 5' or 10'*	Side: *5', 10' or 20'*

Comments:

SUBMISSION	PERMIT FEES	TRANSACTION
□ Submit plans for review	Permit Fee: $	**Form of Payment:**
□ Site survey or site plan	Plan Review Fee: $	**Date Issued:**
□ Fee collected	State Surcharge: $	**Transaction Number:**
	Other: $	**Issued By:**
	Total: $	

Building Official or Designee:	**Date:**
Zoning Administrator or Designee:	**Date:**

Revised April 2019

Deck Plan Worksheet

City of Belle Plaine Building Inspections 952-873-5655

1. Footings (use table R507.3.1)

Bearing capacity of soil {use 1,500 for clay, sandy clay, silty clay, clayey silt, sandy silt and silt/use 2,000 for sand, silty sand, clayey sand, silty gravel, and clayey gravel} (if unknown, you may use 1,500)

_____

Indicate tributary area for each footing {see figure 1 for an example/label each footing with a letter A,B,C,etc… }

A_____ B_____ C_____ D_____ E_____ F_____ G_____ H_____ I_____ J_____

Determine footing size {indicate here the proposed type of footing, X_____ **round** or X_____ **square**}

A_____ B_____ C_____ D_____ E_____ F_____ G_____ H_____ I_____ J_____

2. Post Size (use table R507.4)

Deck post height {from top of footing or grade to the bottom of beam} *Deck post size {4x4, 6X6, or other}*

_____ _____

3. Beams (use table R507.5,)

Species	*Beam Style*	*Deck joist span*	*Deck beam size*	*Beam cantilever "g"*
_____	Flush or Dropped	_____	_____	_____

4. Joists (use table R507.6)

Species	*Size of joists*	*Spacing of joists*	*Allowable joist span*
_____	_____	_____	_____

Allowable cantilever

_____

5. Decking (use table 507.7) {If plastic composite, provide manufacturers specifications}

Decking material type	*Thickness*	*Perpendicular to joist*	*Diagonal to joist*
_____	_____	Yes No	Yes No

6. Deck Ledger Connection (use table R507.9.1.3(1)

Indicate fastener type below

1/2" lag bolt _____

1/2" through bolt _____

Alternate Fastener _____

{If using an alternate deck ledger fastener provide the manufacturers specifications}

Proposed Joist span

_____

On center spacing of fastener

_____

7. Deck Attachment for lateral Loads (see figureR507.9.2(2))

750# capacity, 4 locations, evenly spaced, within 24" of the end of the deck, and per manufacturers specifications

1,500# capacity, 2 locations, within 24" of the end of the deck, and per manufacturers specifications

City of Belle Plaine Residential Deck Handout

Steps to Complete Deck Permit Application

1. Provide a completed residential deck building permit application.
2. Provide a deck floor plan drawn to scale. *See figure #1 as an example.*
   A. Show the perimeter of the deck, include stairway if applicable, provide all dimensions.
   B. Provide footing post/location, label footings A,B,C…. to correspond with the deck plan work sheet.
   C. Show the house line where the deck attaches to house, indicate bump outs and cantilevers.
   D. Provide beam location, indicate beam cantilever if any. Indicate if the beam will be a flush beam or dropped beam (see figure 507.5)
   E. Provide length and direction of joists.
3. Complete the deck plan worksheet.
4. Submit a certificate of survey, site plan or other approved diagram that shows property lines, the home and proposed deck location.

Code Requirement Summary based on the 2020 MN State Residential Code

This is a summary of code requirements, for specific code requirements see the ***2020 MN State Residential code. The 2020 MN State Residential Code can be viewed online at the Department of Labor and Industries website.***

Wood Framed Decks shall be in accordance to **Section R507.1 of the 2020 MN State Residential Code**. For decks using materials and conditions not prescribed in this section refer to Section R301.

1. **Structural Engineering** may be required depending on the specifics of your proposed project (hot tubs, possibly a future porch).

2. **Wood Materials** are required to be #2 grade or better, naturally durable wood or wood that is treated in accordance with AWPA U1-16.

AWPA Use Categories (listed on tag)

UC3A	Exterior above ground, rapid water runoff.	Open porch floors
UC3B	Exterior above ground, poor water runoff.	Deck rail (UC3B or higher), Deck boards (UC3B or higher) Above ground joists and beams (UC3B or higher), Above ground stairs (UC3B or higher).
UC4A	Ground contact, general use.	Deck posts (UC4A or higher), Ground contact joists and beams (UC4A or higher), Ground contact ledger (UC4A or higher), Ground contact stairs (UC4A or higher).
UC4B	Ground contact, heavy duty.	
UC4C	Ground contact, extreme duty.	

Cuts, notches, and drill holes in preservative treated wood need to be field treated.

3. **Plastic Composite** deck boards, stair treads, guards, and handrails are required to comply with ASTM D7032 and be identified as meeting all of the ASTM D7032 standards. (listed on tag)

Plastic composite deck boards, stair treads, guards, and hand rails are required to have a flame spread index of less than 200 when tested in accordance to ASTM E84 or UL723.

Plastic composite deck boards, stair treads, guards, and handrails are required to be installed in accordance to this code and the manufacturer's instructions.

4. **Fasteners and Connectors** made of metal shall be in compliance with R317.3 and Table R507.2.3.

   Flashing shall be corrosion-resistant metal, or approved non-metallic material that is compatible with the structure and the decking materials.

5. **Footings** or other approved structural system shall be designed to accommodate all loads from the structure. All footings shall have minimum depth of 42". The minimum size for concrete footings will be sized based on tributary area (see figure 1), soil bearing capacity, and in accordance with table R507.3.1 (see figure R507.3.1). *Exception: Free-standing decks consisting of joists directly supported on grade over their entire length.*

6. **Deck Posts** for single level wood framed decks with beams that are sized in accordance with Table R507.5 shall be sized in accordance with table R507.4. Where posts bear on concrete footings lateral restraint shall be provided by a manufactured connector or 12" minimum post embedment (12" post embedment may not meet uplift requirements).

7. **Deck Beam** maximum span shall be in accordance with table R507.5. Beam plies shall be fastened with 2 rows of 10D nails at 16" on center along each edge. Beams shall be allowed to cantilever past the post 1/4 the allowable beam span.

   Deck Beam Bearing shall not be less than 1 1/2" for wood or metal and not less than 3" on concrete.
   Deck Beam Splices shall be directly over a post.
   Deck Beam Connections to Supports shall be in accordance with figures R507.5.1(1) and R507.5.1(2)
   Deck Beam Connection to Joists can be made with 3-8D threaded toe nails (2 on one side 1 on other), an approved metal fastener (such as a hurricane clip), or a joist hanger.

8. **Deck Joist** maximum spans shall be in accordance with table R507.6. The maximum spacing for joists shall be limited by the decking materials in accordance with table R507.7. The maximum joist cantilever length is limited to 1/4 the joist span or the maximum cantilever length specified in table R507.6 (which ever is less). Lateral restraint at joist ends and bearing locations shall be provided. Blocking at bearing locations shall not be less than 60% of joist depth, at rims no less than 3-10D nails or 3" screws.

9. **Decking** shall be spaced no more than the maximum allowed in table R507.7 Wood decking shall be attached to the joists with 2-8D threaded nails or two #8 wood screws. Other approved fastener systems shall be installed in accordance with the manufacturers instructions.

10. **Vertical and Lateral Support.** Where supported by attachment to exterior wall decks are required to be positively anchored to the building. Vertical loads shall be transferred to (house) band joists through (deck) ledgers.

    Deck Ledger shall be a minimum of a 2x8 lumber and **shall not support the weight of beams or girders** (beams and girders shall be let in).
    Band Joist shall be a minimum of 2X solid sawn lumber, or 9 1/2" Douglas fir laminated veneer lumber. Band joists shall bear fully on the primary structure and be capable of supporting all loads.

Deck Ledger to Band Joist Fasteners shall be in accordance with tables R507.9.1.3(1) and installed in accordance with table R507.9.1.3(2) and figures R507.9.1.3(1)and R507.9.1.3(2)
Lateral Load Connections when installed in accordance with figure R507.9.2(1) shall be in 2 locations minimum within 24" of each end (1500# capacity minimum).
Lateral Load Connections when installed in accordance with figure R507.9.2(2) shall be in 4 locations evenly distributed across the length of the deck (750# Capacity minimum).

Decks shall not be hung from the cantilever of building floor system. All fasteners shall be corrosion resistant.

11. Stairways shall have a minimum width of 36". The largest tread depth or riser height shall not exceed the smallest by more than 3/8". The opening at the riser shall not allow the passage of a 4" sphere. A means to illuminate all exterior stairways shall be provided. A light source in the immediate area at the top of the stairway or landing is required.

Maximum Rise shall be 7 3/4"
Minimum Run shall be 10"

12. Guard Rails shall be provided where the walking surface of a deck is more than 30" measured vertically to the floor or grade below.

Guard Rail Height shall be 36" measured vertically from the adjacent walking surface to the top of guard rail.
Exceptions: 1. Guard rails on the open sides of stairways shall be no less than 34" measured vertically from the nose of the stair treads to the top of the guard rail.
Opening Limitations shall not be allow the passage of a 4" diameter sphere.
Exceptions: 1. The triangular openings at the side of a stairway shall not allow the passage of a 6" sphere. 2. Guards on the open sides of stairs shall not allow passage of a 4 3/8" sphere.

13. Handrails shall be continuous and returned at each end to the wall or newel. The surface of the handrail shall be smooth with no sharp edges. The cross section of round type I handrails shall not be less than 1 1/4" or more than 2", if not round the handrail shall have a perimeter of not less than 4" and no more than 6 1/4" with a cross section of less than 2 1/4".

Handrail Height is measured vertically from the top of the hand rail to the nose of the stair treads, the height shall not be less than 34" or more than 38".
Handrail Clearance between the inside of the handrail and the adjacent surfaces shall be no less than 1 1/2".

Required Inspections

Footings: after forms and reinforcing is in place, prior to pouring concrete.
Framing: prior to decking being installed.
Final: inspection is required.

General Notes

This handout has been compiled to help give you better understanding of your proposed deck project. It is important to read all of the information. Use the tables and figures that are supplied to fill out the "Deck Plan Work Sheet". The design of the project is the responsibility of the Contractor, Architect, or the Property Owner. The Building Official will verify that the plans are code compliant. On site inspections will occur to verify that the deck is built per plan and is compliant with applicable building codes.

If you have questions during the design process or at the time of build we are happy to help (952-873-5655).

1. Some deck designs may not meet requirements for a future screen porch or 3-season porch. Set back requirements may be different for porches and decks.

2. The reviewed plan shall be kept on the job site and accessible until the final inspection.

3. The inspection card shall be posted until the final inspection is completed.

4. The address of the site shall be posted and visible from the street.

The State of Minnesota requires that all residential building contractors, remodelers and roofers obtain a state license unless they qualify for a specific exemption from the licensing requirements. Any person claiming an exemption must provide a copy of a Certificate of Exemption from the Department of Labor and Industry to the City before a permit can be issued.

All home owners that apply for a building permit are required to sign a Property Owner Waiver form.

To determine if a contractor is required to be licensed or to check on the status of a contractors license please call the Minnesota Department of Labor and Industry, Residential Building Contractors Unit at 651-284-5069 or see the DLI website. https://secure.doli.state.mn.us/lookup/licensing.aspx

Building Permits are not required for decks that are not attached to the house (or structure with a frost protected foundation) and less than 30" above grade. Zoning requirements still apply, please contact the Community Development Department to verify zoning requirements, before building any deck.

If you have questions or need to schedule an inspection, please call the City of Belle Plaine Building Inspections Department at 952-873-5553 or the Building Official at 952-873-5655 between 8:00 am and 4:30 PM Monday through Friday.

Instructions for Deck Plan Worksheet

Complete a to scale drawing of the proposed deck. See *"Steps to Complete Deck Permit Application" #2* for the required details. See Figure 2 for example.

1. ***Footings*** Provide the bearing capacity of the soil. Choose the soil that best describes your soil. If the soils at footing depth is unknown you may estimate 1,500# or provide a soil analysis.

   A. Indicate the tributary area for each footing on the worksheet. Tributary area is determined by drawing a line at the 1/2 way mark between bearing points. Calculate the square footage by multiplying the length by width of each rectangle. See Figure 1 for example, the tributary area is indicated by red dashed lines.

   B. Indicate if the footing will be round or square by placing an X on the line on the work sheet.

   C. To determine the footing size use table R507.3.1. Use the soil bearing capacity and tributary area to determine the footing size and thickness for round or square footings. Indicate the size of each footing on the worksheet.

2. ***Post size*** Use Table R507.4 to determine the minimum allowable post size and maximum height. Post height is measured from the top of the footing or grade to the bottom of the beam. Indicate the proposed post size and height on the work sheet.

3. ***Beams*** use table R-507.5 to determine the maximum allowable beam span.

   A. Indicate the species of lumber (verify with lumber retailer).

   B. Indicate if the beam will be dropped (under the floor system) or flush (the same height as the floor system).

   C. Indicate the beam size. To determine the beam size and span, use table R507.5. Under the correct lumber species find the column along the top that corresponds with the deck joist length. Along the left side find the row that represents your proposed beam size. The maximum beam span will be at the intersection of the row and column.

   D. Cantilevers for a beam can be up to 1/4 of the allowable adjacent beam span. See foot note g at the bottom of the table.

4. ***Joists*** use table R507.6 to determine the maximum joist length and maximum joist cantilever.

   A. Indicate the species of lumber (verify with lumber retailer).

   B. Indicate the proposed size of joists.

   C. Indicate the on center spacing of joists. Keep in mind that the on center spacing is determined by the type of the decking is used. See step #5 to determine the maximum allowed span for decking.

   D. Indicate the maximum allowable joist length. Using table R507.6 find the column across the top that

corresponds with your proposed on center spacing and the allowable joist span. Under the correct lumber species along the left side, find row that represents the proposed joist size. The maximum allowable joist span will be at the intersection of the row and column.

E. Indicate the maximum cantilever. The maximum allowed cantilever is determined by 1/4 the joist span or table R507.6 which ever is less. Using table R507.6 find the column across the top that corresponds with your proposed on center spacing and under joist spacing with cantilevers. Using the correct lumber species along the left side find the row that represents the proposed joist size. The maximum allowable cantilever will be at the intersection of the row and column.

5. ***Decking*** Use table R507.7 to determine the maximum spacing of decking.

A. Determine type of decking. Provide manufacturers specifications if plastic composite decking is proposed.

B. Determine thickness of decking.

C. Determine if decking is perpendicular to joists or diagonal to joists.

6. ***Deck Ledger Connection*** use table R507.9.1.3 (1.). If using an alternate deck ledger connector provide the manufacturers specifications.

A. Determine the type of connection on the left side of the table.

B. Determine the joist span (the unsupported distance between the deck leger and the beam).

C. Use the table to determine the on center spacing of the deck ledger.

7. ***Deck Attachment for Lateral Loads.*** Determine which load connectors will be used. Use figures R507.9.2(1) and R507.9.2(2). Care should be given in laying out the floor joists to insure that a proper connection can be made.

Figure #1 Tributary Area

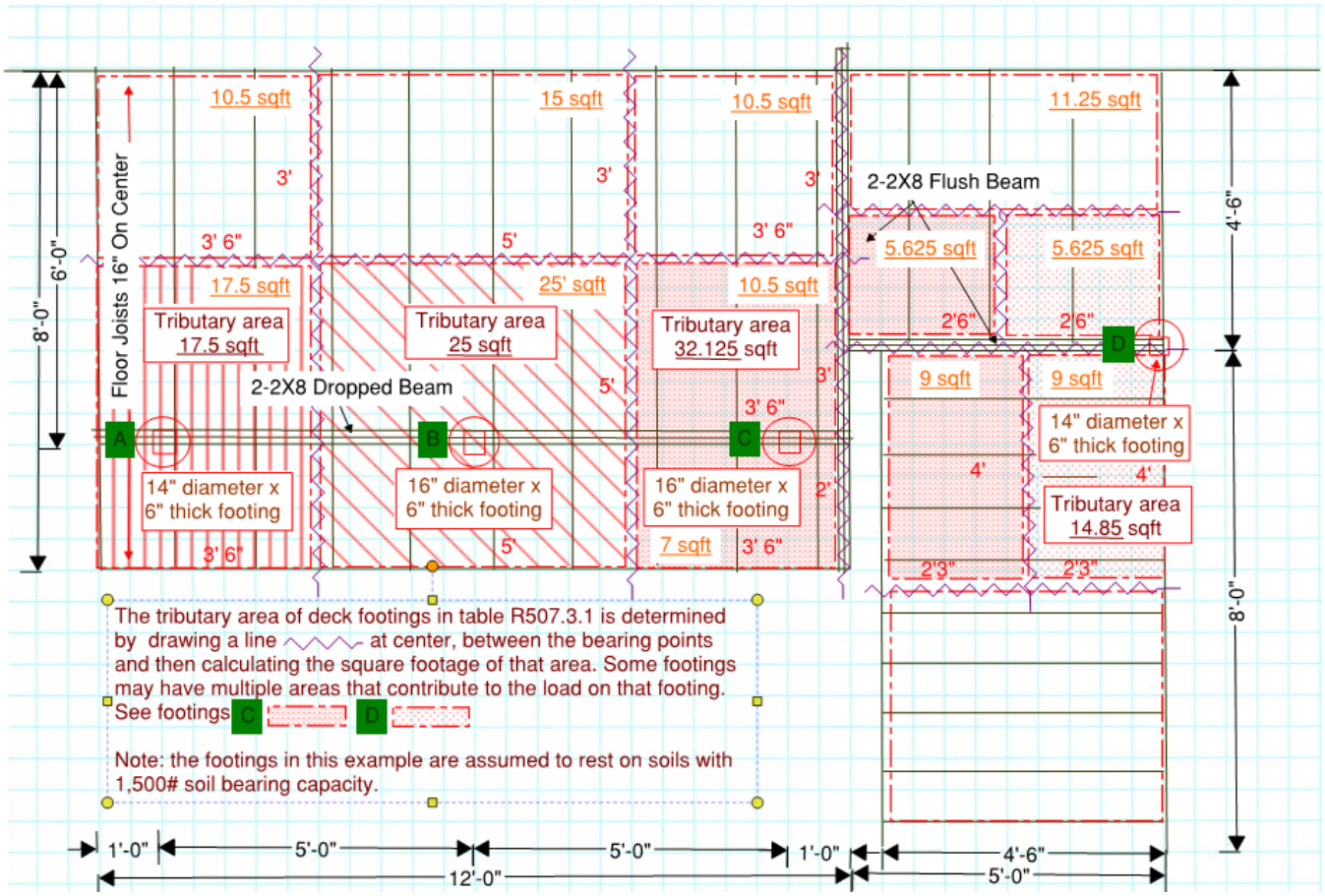

Figure #2 Deck Sample

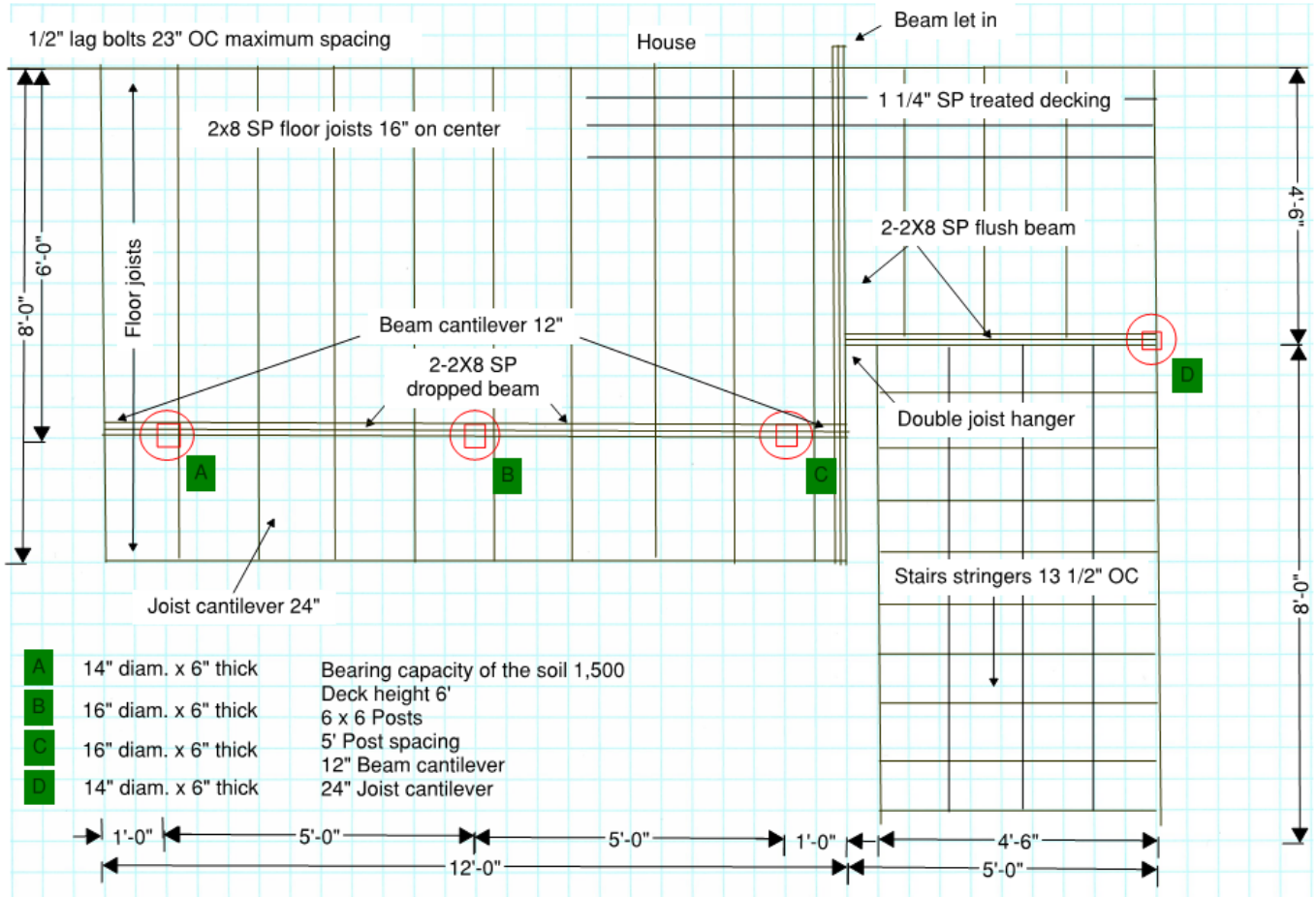

TABLE R507.2.3
FASTENER AND CONNECTOR SPECIFICATIONS FOR DECKS[a, b]

ITEM	MATERIAL	MINIMUM FINISH/COATING	ALTERNATE FINISH/COATING[e]
Nails and timber rivets	In accordance with ASTM F1667	Hot-dipped galvanized per ASTM A153	Stainless steel, silicon bronze or copper
Bolts[c] Lag screws[d] (including nuts and washers)	In accordance with ASTM A307 (bolts), ASTM A563 (nuts), ASTM F844 (washers)	Hot-dipped galvanized per ASTM A153, Class C (Class D for $^3/_8$-inch diameter and less) or mechanically galvanized per ASTM B695, Class 55 or 410 stainless steel	Stainless steel, silicon bronze or copper
Metal connectors	Per manufacturer's specification	ASTM A653 type G185 zinc coated galvanized steel or post hot-dipped galvanized per ASTM A123 providing a minimum average coating weight of 2.0 oz./ft^2 (total both sides)	Stainless steel

For SI: 1 inch = 25.4 mm, 1 foot = 304.8 mm.

a. Equivalent materials, coatings and finishes shall be permitted.

b. Fasteners and connectors exposed to salt water or located within 300 feet of a salt water shoreline shall be stainless steel.

c. Holes for bolts shall be drilled a minimum $^1/_{32}$ inch and a maximum $^1/_{16}$ inch larger than the bolt.

d. Lag screws $^1/_2$ inch and larger shall be predrilled to avoid wood splitting per the National Design Specification (NDS) for Wood Construction.

e. Stainless-steel-driven fasteners shall be in accordance with ASTM F1667.

FIGURE R507.3
DECK POSTS TO DECK FOOTING CONNECTION

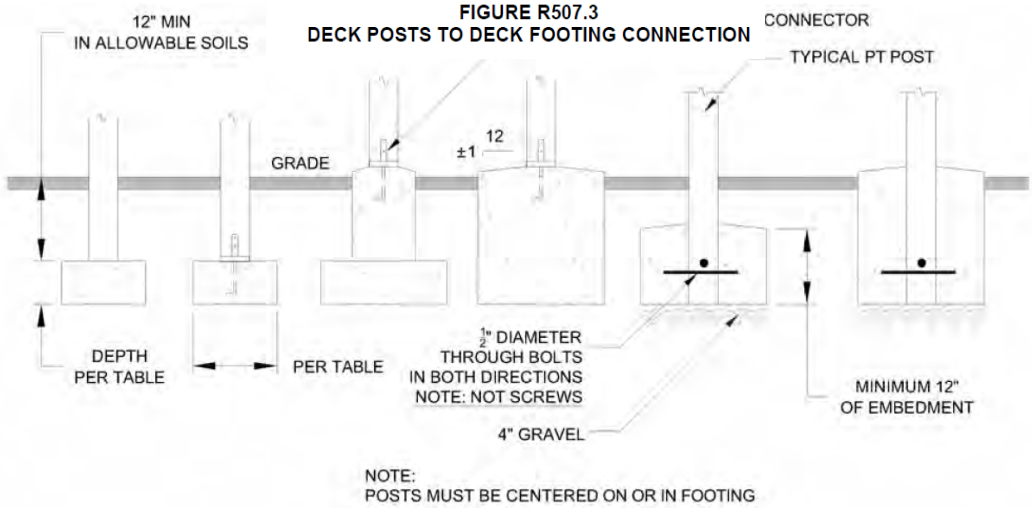

For SI: 1 inch = 25.4 mm.

FIGURE R507.3
DECK POSTS TO DECK FOOTING CONNECTION

TABLE R507.3.1
MINIMUM FOOTING SIZE FOR DECKS

LIVE LOAD[b] (psf)	TRIBUTARY AREA (sq. ft.)	LOAD BEARING VALUE OF SOILS[a, c, d] (psf)											
		1500[e]			2000[e]			2500[e]			≥ 3000[e]		
		Side of a square footing (inches)	Diameter of a round footing (inches)	Thickness (inches)	Side of a square footing (inches)	Diameter of a round footing (inches)	Thickness (inches)	Side of a square footing (inches)	Diameter of a round footing (inches)	Thickness (inches)	Side of a square footing (inches)	Diameter of a round footing (inches)	Thickness (inches)
40	20	12	14	6	12	14	6	12	14	6	12	14	6
	40	14	16	6	12	14	6	12	14	6	12	14	6
	60	17	19	6	15	17	6	13	15	6	12	14	6
	80	20	22	7	17	19	6	15	17	6	14	16	6
	100	22	25	8	19	21	6	17	19	6	15	17	6
	120	24	27	9	21	23	7	19	21	6	17	19	6
	140	26	29	10	22	25	8	20	23	7	18	21	6
	160	28	31	11	24	27	9	21	24	8	20	22	7

For SI: 1 inch = 25.4 mm, 1 square foot = 0.0929 m^2, 1 pound per square foot = 0.0479 kPa.

a. Interpolation permitted, extrapolation not permitted.

b. Live load = 40 psf, dead load = 10 psf.

c. Assumes minimum square footing to be 12 inches x 12 inches x 6 inches for 6 x 6 post.

d. If the support is a brick or CMU pier, the footing shall have a minimum 2-inch projection on all sides.

e. Area, in square feet, of deck surface supported by post and footings.

Copyright 2020, International Code Council, Inc., Washington D.C. Reproducced with permission. All rights reserved. www.iccsafe.org

TABLE R507.4
DECK POST HEIGHT[a]

DECK POST SIZE	MAXIMUM HEIGHT[a, b] (feet-inches)
4 × 4	6-9[c]
4 × 6	8
6 × 6	14
8 × 8	14

For SI: 1 inch = 25.4 mm, 1 foot = 304.8 mm, 1 pound per square foot = 0.0479 kPa.

For SI: 1 inch = 25.4 mm, 1 foot = 304.8 mm, 1 pound per square foot = 0.0479 kPa.

a. Measured to the underside of the beam.

b. Based on 40 psf live load.

c. The maximum permitted height is 8 feet for one-ply and two-ply beams. The maximum permitted height for three-ply beams on post cap is 6 feet 9 inches.

FIGURE R507.5
TYPICAL DECK JOIST SPANS

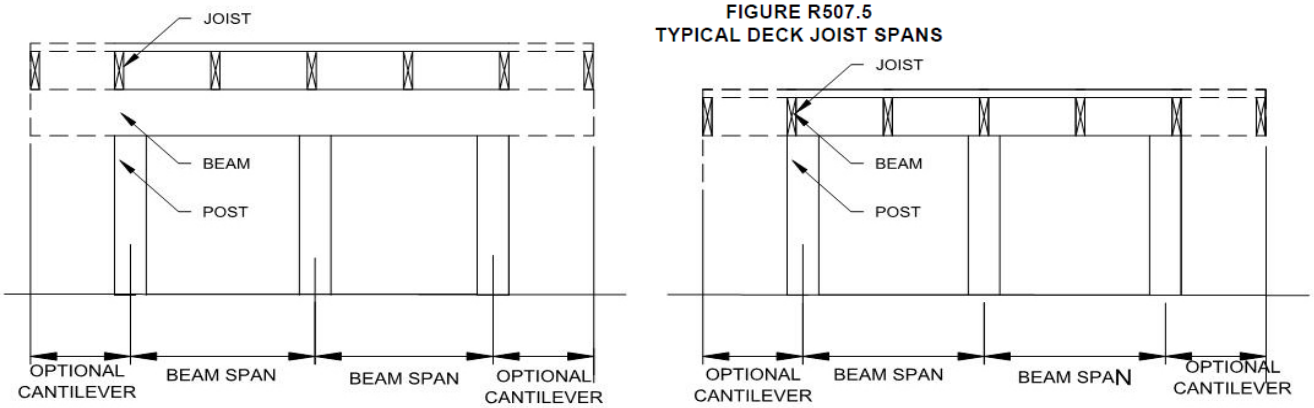

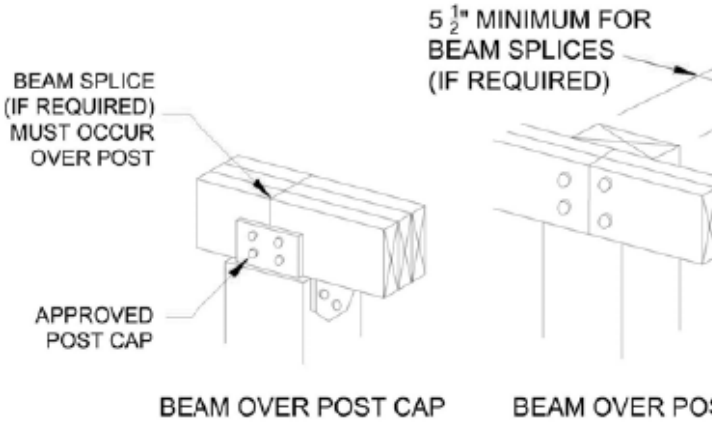

FIGURE R507.5.1(1)
DECK BEAM TO DECK POST

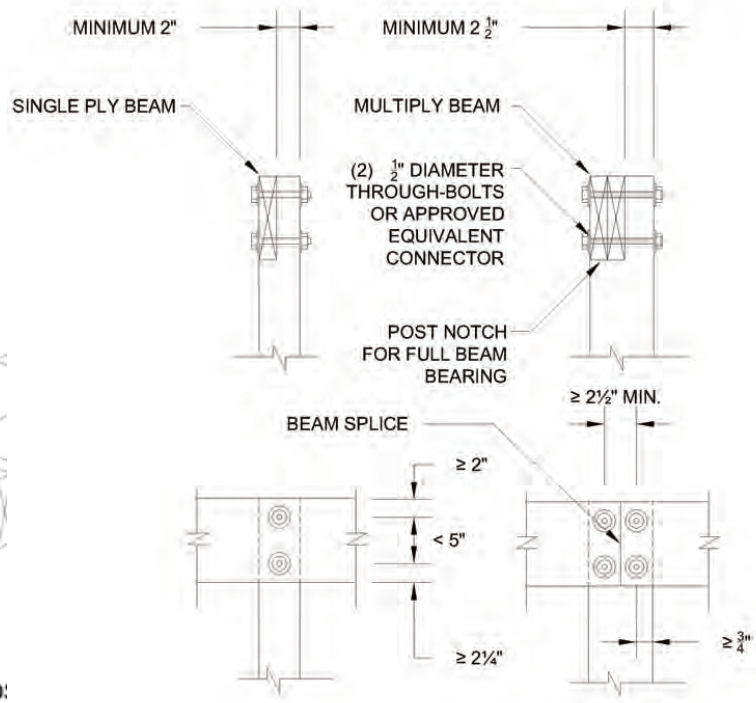

FIGURE R507.5.1(2)
NOTCHED POST-TO-BEAM CONNECTION

TABLE R507.5
DECK BEAM SPAN LENGTHS[a, b, g] (feet - inches)

SPECIES[e]	SIZE[d]	DECK JOIST SPAN LESS THAN OR EQUAL TO: (feet)						
		6	8	10	12	14	16	18
Southern pine	1 – 2 × 6	4-11	4-0	3-7	3-3	3-0	2-10	2-8
	1 – 2 × 8	5-11	5-1	4-7	4-2	2-10	3-7	3-5
	1 – 2 × 10	7-0	6-0	5-5	4-11	4-7	4-3	4-0
	1 – 2 × 12	8-3	7-1	6-4	5-10	5-5	5-0	4-9
	2 – 2 × 6	6-11	5-11	5-4	4-10	4-6	4-3	4-0
	2 – 2 × 8	8-9	7-7	6-9	6-2	5-9	5-4	5-0
	2 – 2 × 10	10-4	9-0	8-0	7-4	6-9	6-4	6-0
	2 – 2 × 12	12-2	10-7	9-5	8-7	8-0	7-6	7-0
	3 – 2 × 6	8-2	7-5	6-8	6-1	5-8	5-3	5-0
	3 – 2 × 8	10-10	9-6	8-6	7-9	7-2	6-8	6-4
	3 – 2 × 10	13-0	11-3	10-0	9-2	8-6	7-11	7-6
	3 – 2 × 12	15-3	13-3	11-10	10-9	10-0	9-4	8-10
Douglas fir-larch[e], hem-fir[e], spruce-pine-fir[e], redwood, western cedars, ponderosa pine[f], red pine[f]	3 × 6 or 2 – 2 x 6	5-5	4-8	4-2	3-10	3-6	3-1	2-9
	3 × 8 or 2 – 2 × 8	6-10	5-11	5-4	4-10	4-6	4-1	3-8
	3 × 10 or 2 – 2 × 10	8-4	7-3	6-6	5-11	5-6	5-1	4-8
	3 × 12 or 2 – 2 × 12	9-8	8-5	7-6	6-10	6-4	5-11	5-7
	4 × 6	6-5	5-6	4-11	4-6	4-2	3-11	3-8
	4 × 8	8-5	7-3	6-6	5-11	5-6	5-2	4-10
	4 × 10	9-11	8-7	7-8	7-0	6-6	6-1	5-8
	4 × 12	11-5	9-11	8-10	8-1	7-6	7-0	6-7
	3 – 2 × 6	7-4	6-8	6-0	5-6	5-1	4-9	4-6
	3 – 2 × 8	9-8	8-6	7-7	6-11	6-5	6-0	5-8
	3 – 2 × 10	12-0	10-5	9-4	8-6	7-10	7-4	6-11
	3 – 2 × 12	13-11	12-1	10-9	9-10	9-1	8-6	8-1

For SI: 1 inch = 25.4 mm, 1 foot = 304.8 mm, 1 pound per square foot = 0.0479 kPa, 1 pound = 0.454 kg.
a. Live load = 40 psf, dead load = 10 psf, L/Δ = 360 at main span, L/Δ = 180 at cantilever with a 220-pound point load applied at the end.
b. Beams supporting deck joists from one side only.
c. No. 2 grade, wet service factor.
d. Beam depth shall be greater than or equal to depth of joists with a flush beam condition.
e. Includes incising factor.
f. Northern species. Incising factor not included.
g. Beam cantilevers are limited to the adjacent beam's span divided by 4.

TABLE R507.6
DECK JOIST SPANS FOR COMMON LUMBER SPECIES (ft. - in.)

SPECIES[a]	SIZE	ALLOWABLE JOIST SPAN[b]			MAXIMUM CANTILEVER[c, f]		
		SPACING OF DECK JOISTS (inches)			SPACING OF DECK JOISTS WITH CANTILEVERS[c] (inches)		
		12	16	24	12	16	24
Southern pine	2 × 6	9-11	9-0	7-7	1-3	1-4	1-6
	2 × 8	13-1	11-10	9-8	2-1	2-3	2-5
	2 × 10	16-2	14-0	11-5	3-4	3-6	2-10
	2 × 12	18-0	16-6	13-6	4-6	4-2	3-4
Douglas fir-larch[d], hem-fir[d] spruce-pine-fir[d],	2 × 6	9-6	8-8	7-2	1-2	1-3	1-5
	2 × 8	12-6	11-1	9-1	1-11	2-1	2-3
	2 × 10	15-8	13-7	11-1	3-1	3-5	2-9
	2 × 12	18-0	15-9	12-10	4-6	3-11	3-3
Redwood, western cedars, ponderosa pine[e], red pine[e]	2 × 6	8-10	8-0	7-0	1-0	1-1	1-2
	2 × 8	11-8	10-7	8-8	1-8	1-10	2-0
	2 × 10	14-11	13-0	10-7	2-8	2-10	2-8
	2 × 12	17-5	15-1	12-4	3-10	3-9	3-1

For SI: 1 inch = 25.4 mm, 1 foot = 304.8 mm, 1 pound per square foot = 0.0479 kPa, 1 pound = 0.454 kg.
a. No. 2 grade with wet service factor.
b. Live load = 40 psf, dead load = 10 psf, L/Δ = 360.
c. Live load = 40 psf, dead load = 10 psf, L/Δ = 360 at main span, L/Δ = 180 at cantilever with a 220-pound point load applied to end.
d. Includes incising factor.
e. Northern species with no incising factor.
f. Cantilevered spans not exceeding the nominal depth of the joist are permitted.

FIGURE R507.6
TYPICAL DECK JOIST SPANS

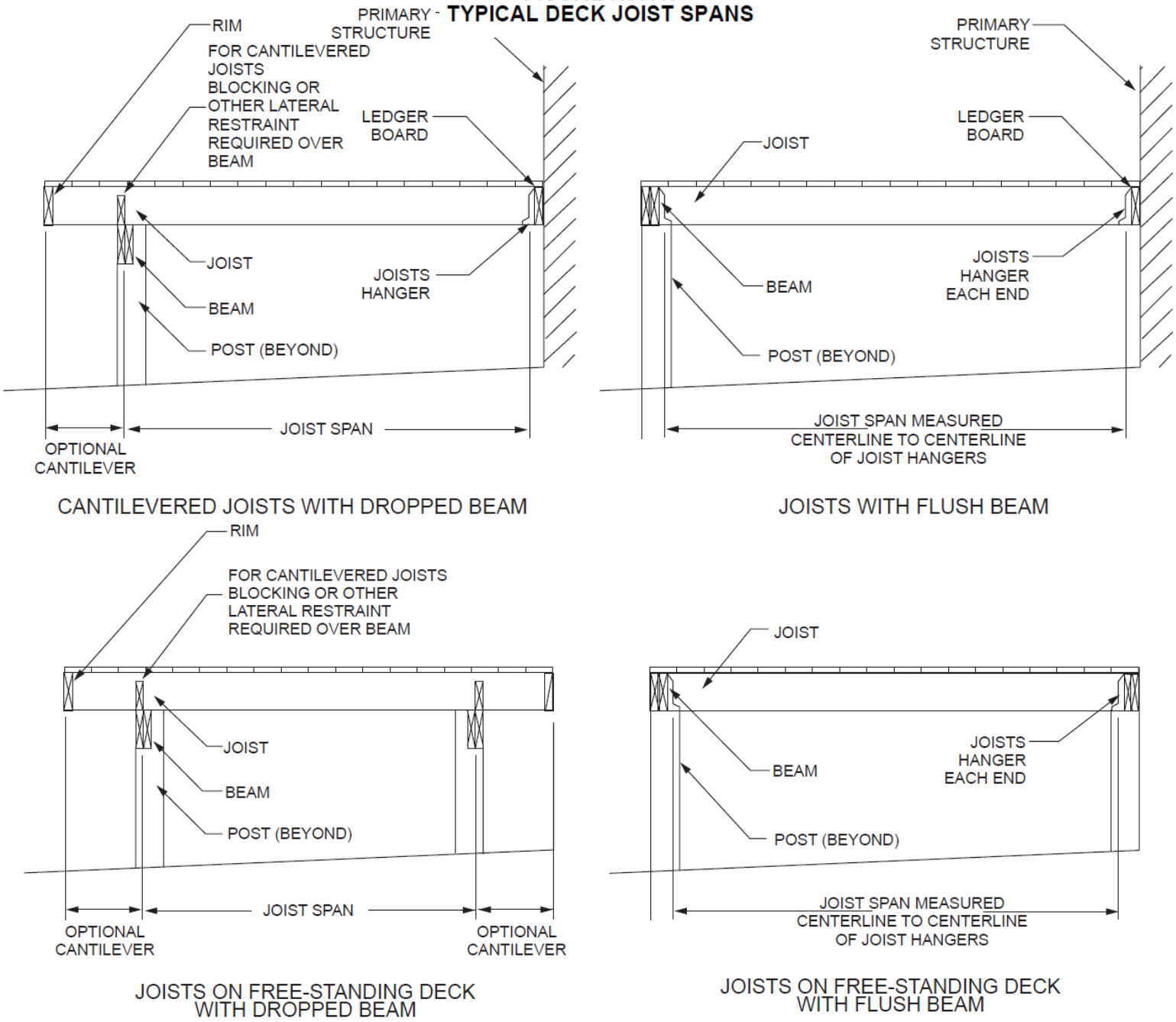

TABLE R507.7
MAXIMUM JOIST SPACING FOR DECKING

DECKING MATERIAL TYPE AND NOMINAL SIZE	MAXIMUM ON-CENTER JOIST SPACING	
	Decking perpendicular to joist	Decking diagonal to joist[a]
$1^1/_4$-inch-thick wood	16 inches	12 inches
2-inch-thick wood	24 inches	16 inches
Plastic composite	In accordance with Section R507.2	In accordance with Section R507.2

For SI: 1 inch = 25.4 mm, 1 foot = 304.8 mm, 1 degree = 0.01745 rad.

a. Maximum angle of 45 degrees from perpendicular for wood deck boards.

TABLE R507.9.1.3(1)
DECK LEDGER CONNECTION TO BAND JOIST[a]
(Deck live load = 40 psf, deck dead load = 10 psf

CONNECTION DETAILS	JOIST SPAN						
	6′ and less	6′1″ to 8′	8′1″ to 10′	10′1″ to 12′	12′1″ to 14′	14′1″ to 16′	16′1″ to 18′
	On-center spacing of fasteners						
$^1/_2$-inch diameter lag screw with $^1/_2$-inch maximum sheathing[b, c]	30	23	18	15	13	11	10
$^1/_2$-inch diameter bolt with $^1/_2$-inch maximum sheathing[c]	36	36	34	29	24	21	19
$^1/_2$-inch diameter bolt with 1-inch maximum sheathing[d]	36	36	29	24	21	18	16

For SI: 1 inch = 25.4 mm, 1 foot = 304.8 mm, 1 pound per square foot = 0.0479 kPa.

a. Ledgers shall be flashed in accordance with Section R703.4 to prevent water from contacting the house band joist.

b. The tip of the lag screw shall fully extend beyond the inside face of the band joist.

c. Sheathing shall be wood structural panel or solid sawn lumber.

d. Sheathing shall be permitted to be wood structural panel, gypsum board, fiberboard, lumber, or foam sheathing. Up to $^1/_2$-inch thickness of stacked washers shall be permitted to substitute for up to $^1/_2$ inch of allowable sheathing thickness where combined with wood structural panel or lumber sheathing.

TABLE R507.9.1.3(2)
PLACEMENT OF LAG SCREWS AND BOLTS IN DECK LEDGERS AND BAND JOISTS

MINIMUM END AND EDGE DISTANCES AND SPACING BETWEEN ROWS				
	TOP EDGE	BOTTOM EDGE	ENDS	ROW SPACING
Ledger[a]	2 inches[d]	$^3/_4$ inch	2 inches[b]	$1^5/_8$ inches[b]
Band Joist[c]	$^3/_4$ inch	2 inches	2 inches[b]	$1^5/_8$ inches[b]

For SI: 1 inch = 25.4 mm.

a. Lag screws or bolts shall be staggered from the top to the bottom along the horizontal run of the deck ledger in accordance with Figure R507.9.1.3(1).

b. Maximum 5 inches.

c. For engineered rim joists, the manufacturer's recommendations shall govern.

d. The minimum distance from bottom row of lag screws or bolts to the top edge of the ledger shall be in accordance with Figure R507.9.1.3(1).

FIGURE R507.9.1.3(1)
PLACEMENT OF LAG SCREWS AND BOLTS IN LEDGERS

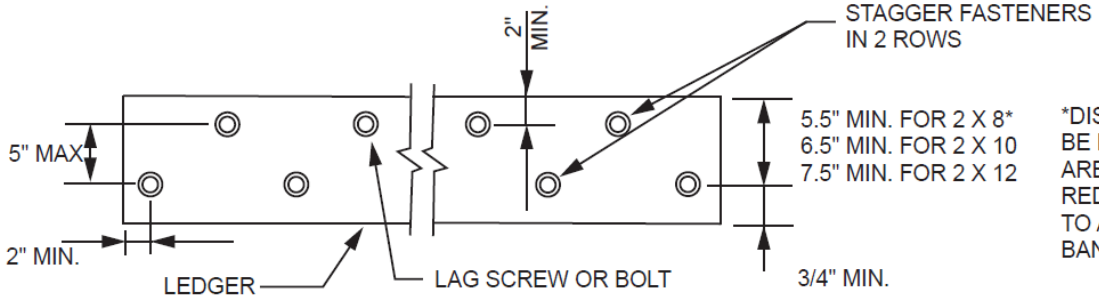

*DISTANCE SHALL BE PERMITTED TO BE REDUCED TO 4.5" IF LAG SCREWS ARE USED OR BOLT SPACING IS REDUCED TO THAT OF LAG SCREWS TO ATTACH 2 X 8 LEDGERS TO 2 X 8 BAND JOISTS.

For SI: 1 inch = 25.4 mm.

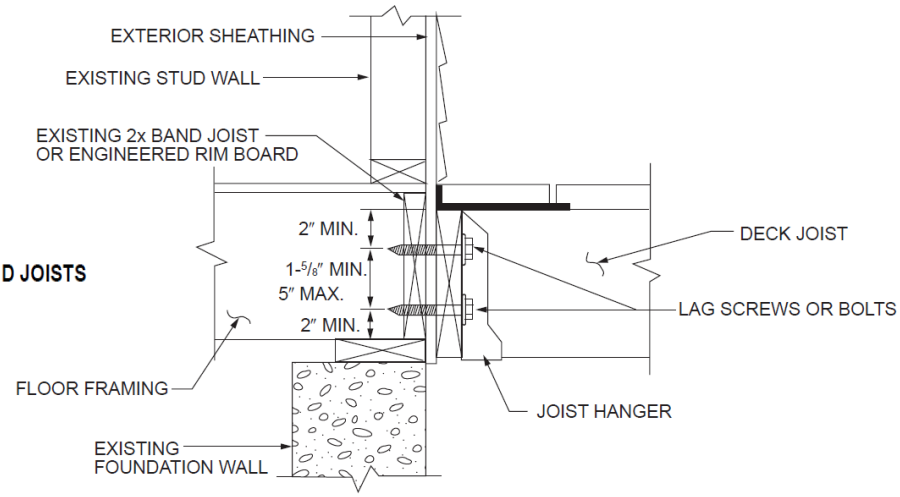

FIGURE R507.9.1.3(2)
PLACEMENT OF LAG SCREWS AND BOLTS IN BAND JOISTS

Copyright 2020, International Code Council, Inc., Washington D.C. Reproduced with permission. All rights reserved. www.iccsafe.org

FIGURE R507.9.2(1)
DECK ATTACHMENT FOR LATERAL LOADS

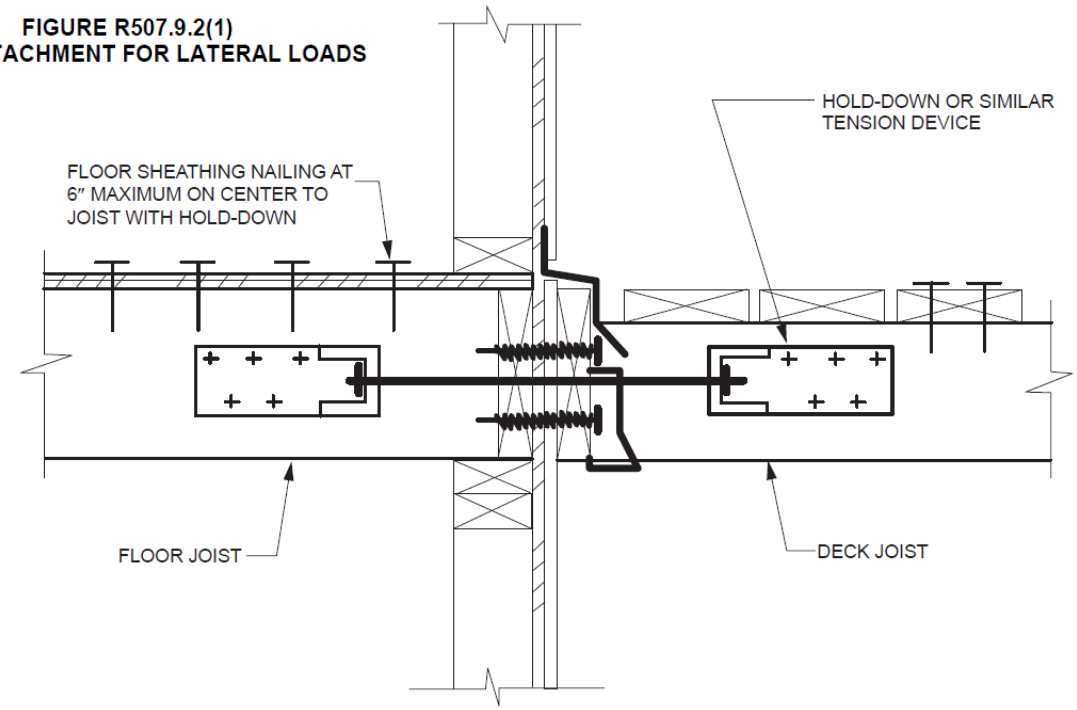

FIGURE R507.9.2(2)
DECK ATTACHMENT FOR LATERAL LOADS

NOTE:
THIS DETAIL IS APPLICABLE WHERE FLOOR JOISTS ARE PARALLEL TO DECK JOISTS.

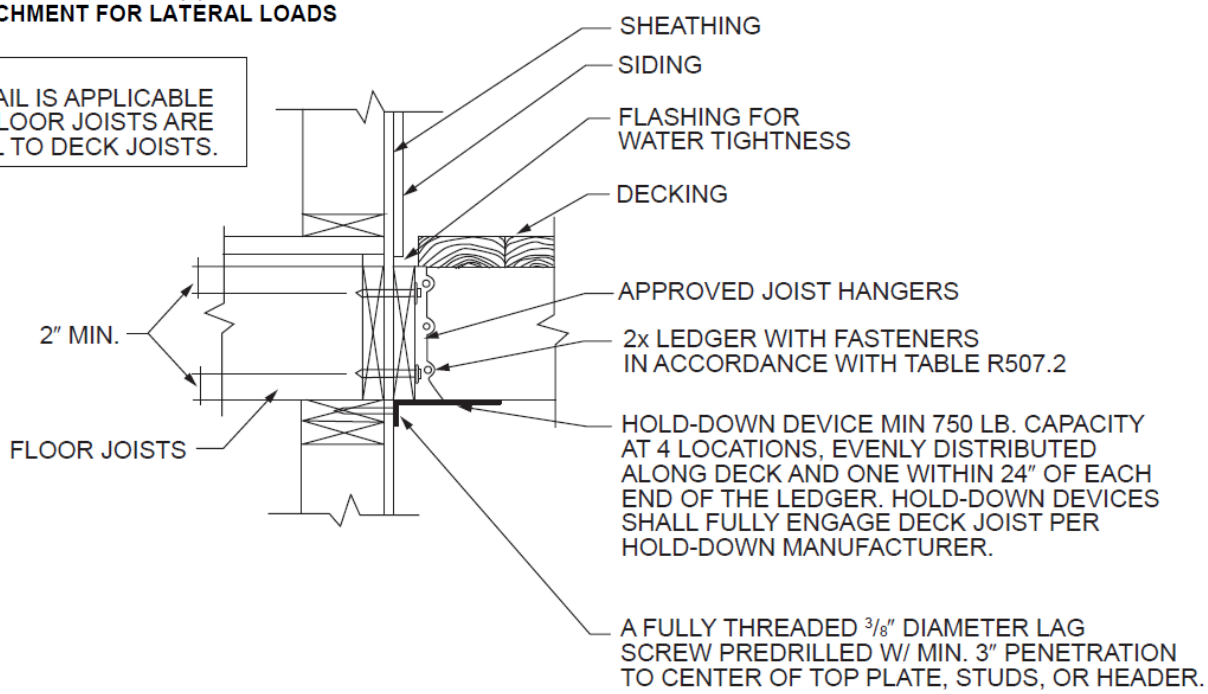

Joist-to-Beam Detail.

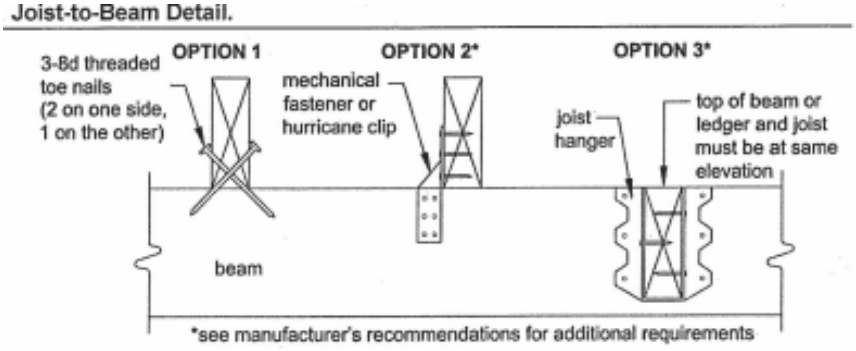

Figure 24, Example Guard Detail

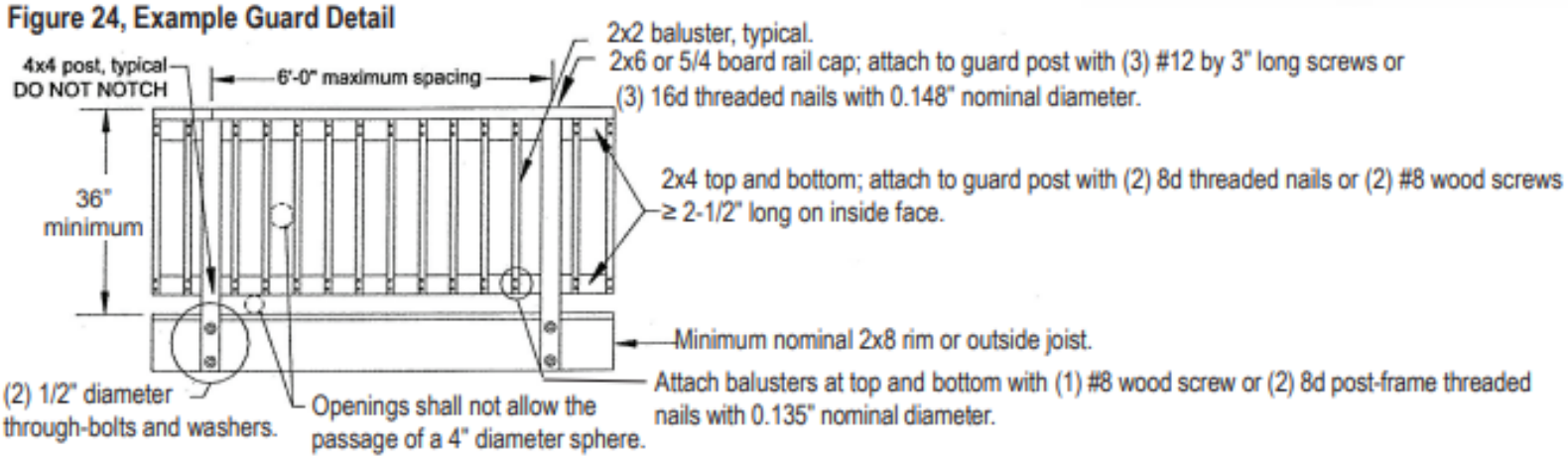

Figure 31. Stair Stringer Attachment Detail.

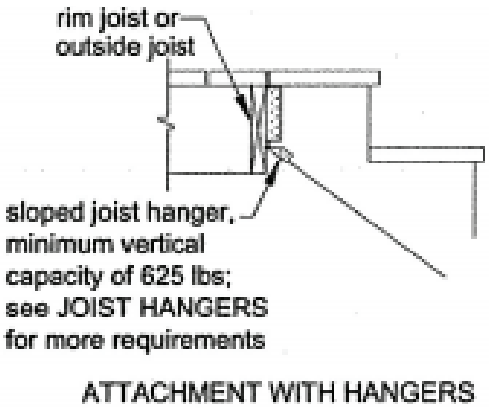

Figure 30. Stair Guard Requirements.

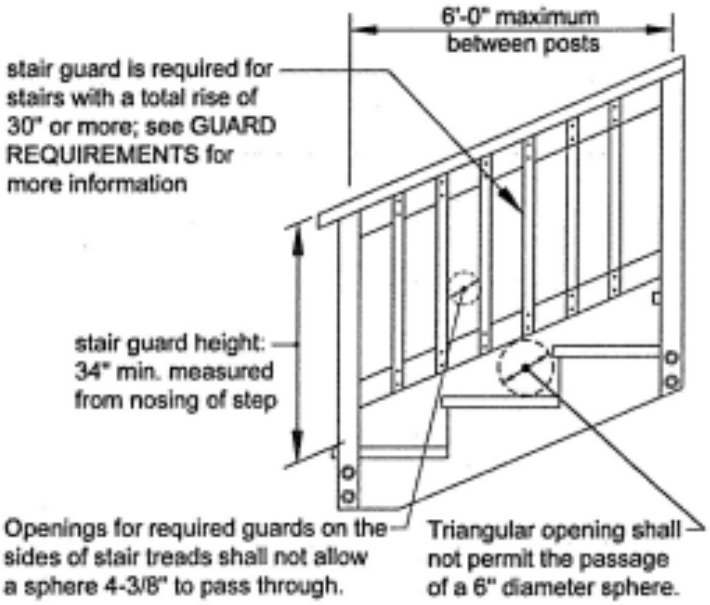

Figure 32A. Handrail Mounting Examples.

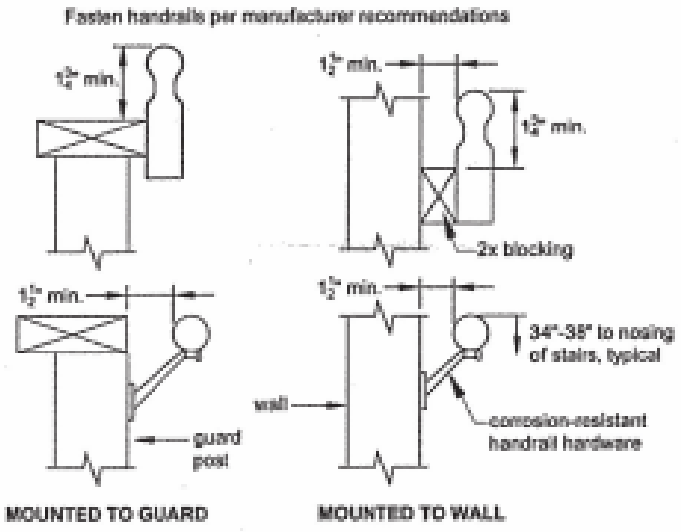
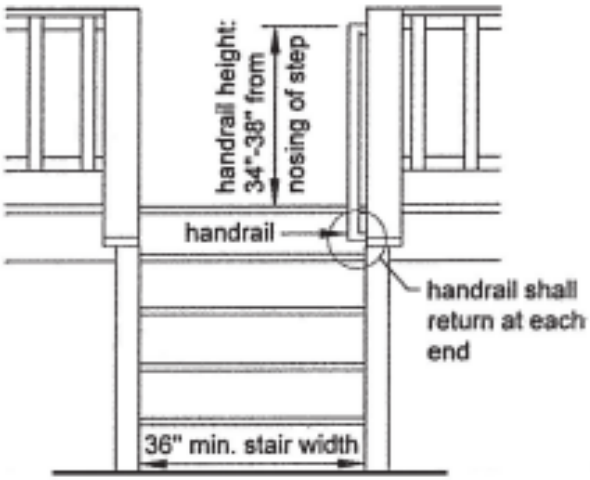
Figure 33. Miscellaneous Stair Requirements.